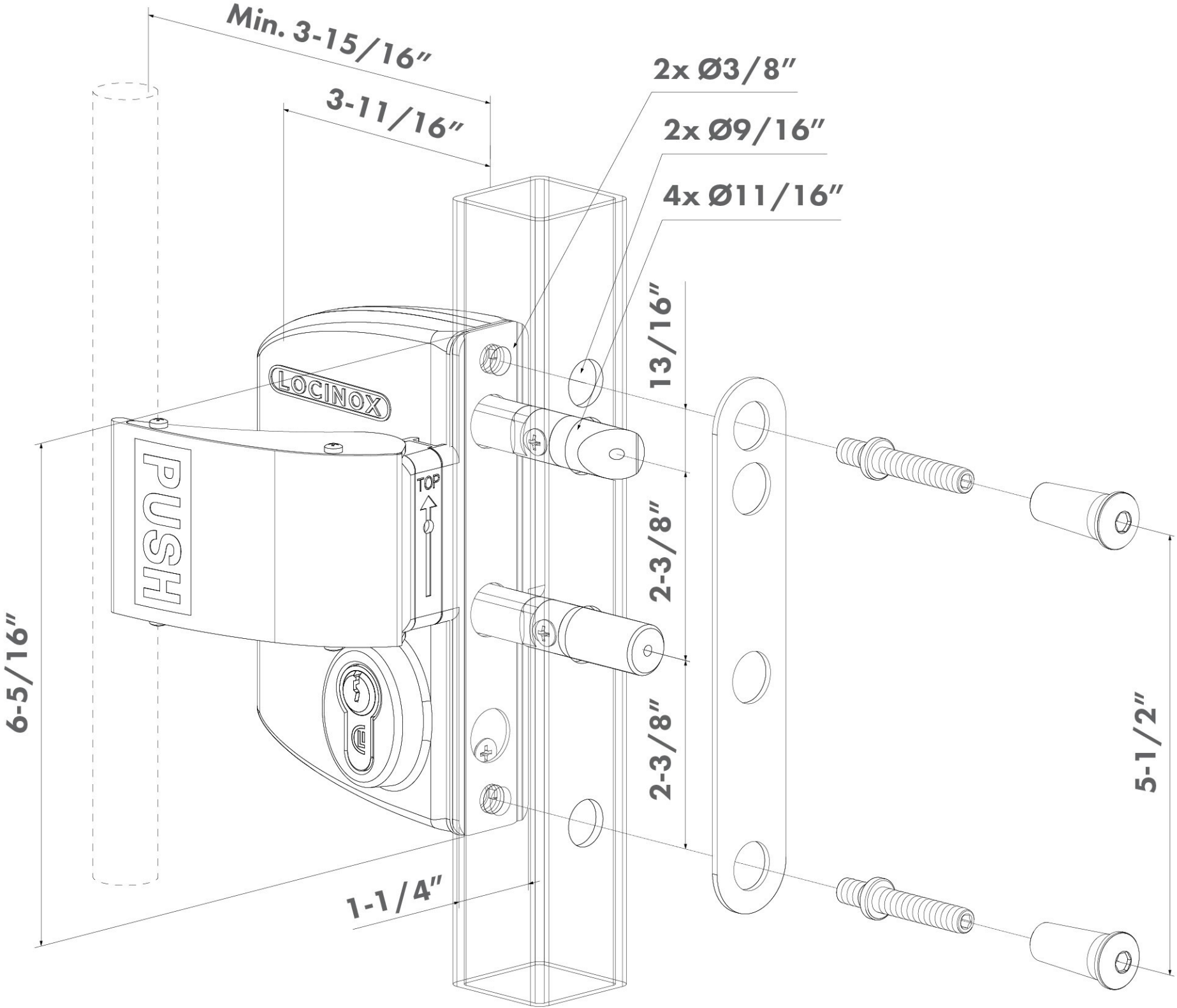
Min. 3-15/16″
3-11/16″
2x Ø3/8″
2x Ø9/16″
4x Ø11/16″
13/16″
2-3/8″
2-3/8″
5-1/2″
6-5/16″
1-1/4″
LOCINOX
PUSH
TOP